DRAWING No. W 584

DO NOT SCALE

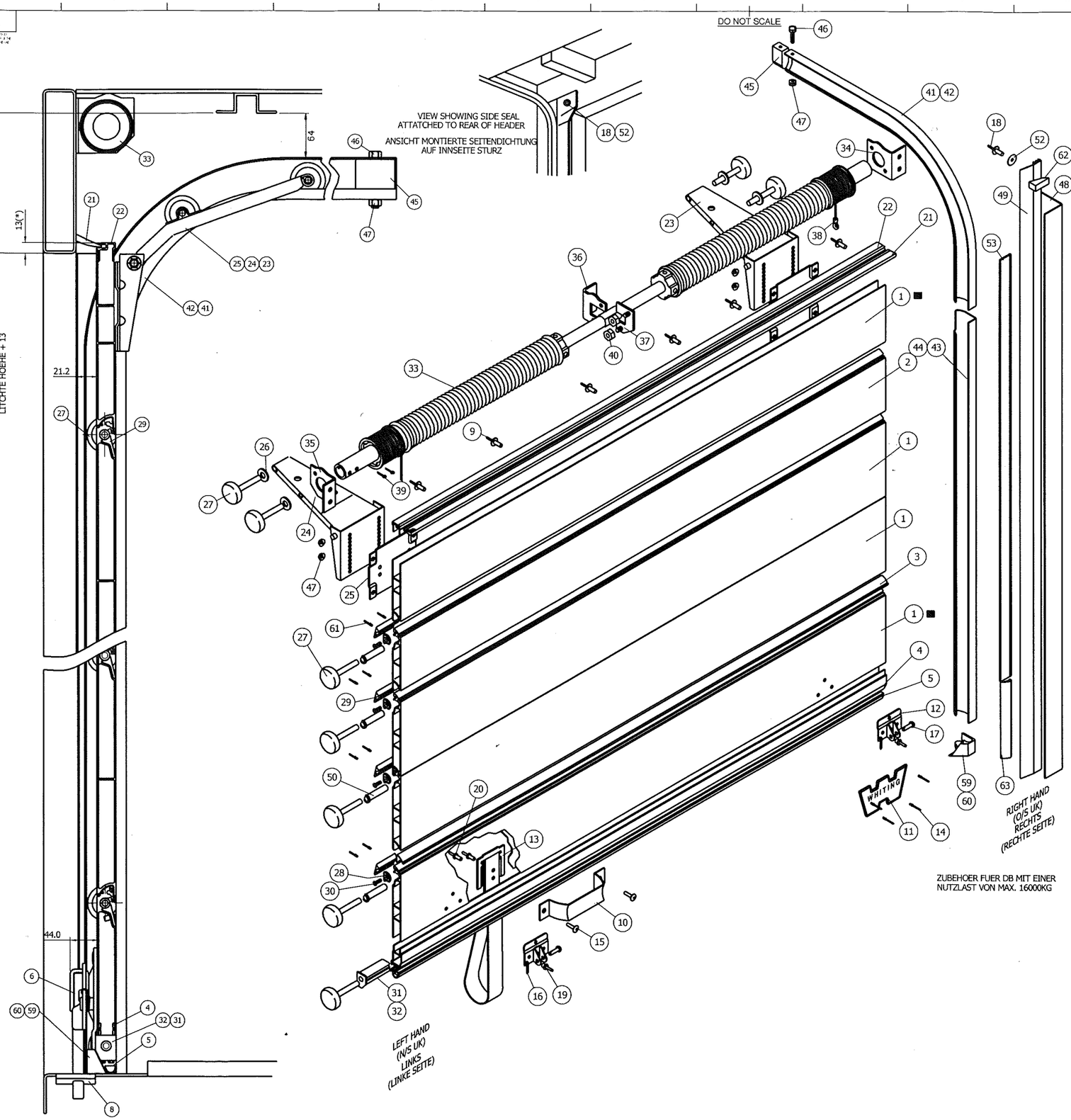

ZUBEHOER FUER DB MIT EINER
NUTZLAST VON MAX. 16000KG

PARTS LIST

REF	QTY	DESCRIPTION	PART NUMBER	MATERIAL	DWG No
1	A/R	278mm EXTRUDED PANEL	3010100160620	ALUMINIUM EXTRUSION	W 502
2	A/R	139mm EXTRUDED PANEL	3010100160600	ALUMINIUM EXTRUSION	W 503
3	A/R	PANEL INTERSEAL	3010317060002		W 506
4	1	BOTTOM SEAL EXTRUSION	3010100160420		W 501
5	1	'D' TYPE BOTTOM SEAL	3010433000180	NEOPRENE	W 514
6	1	77 TYPE LOCK ASSEMBLY	30177-0000000	'E'-COATED	
7	1	LOCK HANDLE KEEPER	3012766-00001	'E'-COATED	
8	1	LATCH PLATE	3012137-000MS	MILD STEEL	W 83
9	A/R	Ø4.8 x 11mm Lg DOMED HEAD RIVET	3010129001700		
10	1	GRAB HANDLE	3011715-00000	'E'-COATED	
11	1	NAME PLATE	301NP00000018		
12	2	CABLE ANCHOR	3015803-00000	'E'-COATED	
13	1	19" PULL STRAP & BUCKLE	30123-0000015		
14	A/R	Ø3.2 x 10mm Lg DOME HEAD RIVET	30110-1002-15		
15	A/R	Ø1/14" x 1 13/32" SEMI TUBULAR RIVET	30110-1002-10		
16	2	1/8" x 3/4"Lg COTTER PIN	30110-1009-07		
17	2	5/16" x 1"Lg CLEVIS PIN	30110-1004-01		
18	A/R	Ø6.4 x 13mm Lg DOMED HEAD RIVET	301850-000000		
19	A/R	Ø6.35 x 21mm HEMLOCK RIVET	30110-1002-13		
20	A/R	Ø6.35 x 15mm HEMLOCK RIVET	30110-1002-14		
21	1	5/32" x 1 1/2" BRUSH SEAL	301-5843-0000		
22	1	TOP SEAL CARRIER EXTRUSION	301-7488-0003	ALUMINIUM EXTRUSION	W 504
23	1	CLOSURE ARM (UK O/S)	3011336-7-000	WHITE	
24	1	CLOSURE ARM (UK N/S)	3011336-8-000	WHITE	
25	2	CLOSURE ARM MOUNTING PLATE	3011920-00000		W 301
26	A/R	WASHER - SPACER	30106-0000000		
27	A/R	ROLLER	3012996-10000	STEEL	
28	A/R	ANTI-LOZENGE WASHER	3019200033001		W 513
29	A/R	ROLLER HOLDER EXTRUSION		CUT FROM 3011920-00560	W 505
30	A/R	M6 x 25 HARD STEEL FLOOR SCREW	3010231240355		
31	1	BOTTOM ROLLER HOLDER (UK N/S)	3019200033003	NYLON	W 566
32	1	BOTTOM ROLLER HOLDER (UK O/S)	3019200033004	NYLON	W 566
33	1	BALANCER ASSEMBLY			
34	1	BALANCER MTG BRACKET (UK O/S)	3012523-00000		
35	1	BALANCER MTG BRACKET (UK N/S)	3012524-00000		
36	1	BALANCER CENTER BRACKET	3012525-00000		
37	1	TORQUE CLAMP	3012526-00000		
38	2	125" CABLE	3011-1A000000		
39	2	Ø5 x 38mm SPLIT PIN	30110-1009-08		
40	A/R	5/16" WHIZ NUT	30110-1063-01		
41	1	R 10" HORIZONTAL TRACK (UK O/S)	30111-04A0000	MILD STEEL, GALVANISED	W 220
42	1	R 10" HORIZONTAL TRACK (UK N/S)	30111-05A0000	MILD STEEL, GALVANISED	W 220
43	2	VERTICAL TRACK	3011031-02000		W 398
45	2	TRACK BUMPER STOP	30183-0000000	RUBBER	
46	2	HEX HEAD SCREW 1/4" x 2 1/2"	30110-1010-03		
47	2	1/4" KEP NUT	30110-1022-01		
48	2	57 x 63 MOUNTING ANGLE	30161-0000000	MILD STEEL, GALVANISED	W 266
49	2	SIDE SEAL	3010100000009		W 546
50	A/R	ROLLER SLEEVE	30103050020		W 631
51					
52	A/R	PENNT WASHER	30193-0000020		
53	2	BRUSH SEAL	3017105-00000		
54	1	BOTTOM SEAL RETAINING PLUG	3010433000185		W 520
55	A/R	Ø6.5 x 21 HEMLOCK RIVET	30110-1002-13		
56	A/R	ANTI-LOZENGE WASHER (UK N/S)	3019200033001		W 513
57	A/R	ANTI-LOZENGE WASHER (UK O/S)	3019200033002		W 513
58					
59	1	BOTTOM CORNER SEAL (UK N/S)	3010202030117		W 547
60	1	BOTTOM CORNER SEAL (UK N/S)	3010202030116		W 547
61	A/R	Ø4.8 x 14.6 AVIBULB RIVET	30110-1002-20		
62	2	TOP CORNER SEAL	3010433000118		
63	2	SIDE SEAL	3020000013600	NEOPRENE	R 10
64	1	70-300 LOCK ASSY	30170-300-000		
	1	70-200 LOCK ASSY C/W BEST CYLINDER	30170-200-300		
	1	70 -200 LOCK ASSY C/W YALE CYLINDER	30170-202-301		
65	2	BOTTOM ROLLER HOLDER	3010212000550		W 804
66	1	BOTTOM SEAL CARRIER	3011801-00000		W 212
67	1	BOTTOM SEAL	3011676-000UK		W 172
68	10	Ø6 x 63 SEMI TUBE RIVET	3010224460103		

NOTES!

1. LEFT & RIGHT HAND ARE DETERMINED BY STANDING OUTSIDE LOOKING AT THE SHUTTER.
2. NEOPRENE SIDE SEAL ITEM 63 TO BE CUT TO 200mm LONG.
3. ITEM MARKED ■ ARE HEIGHT VARIABLE TO ACHIEVE APERTURE HEIGHT
4. SEE SHEET 2 FOR LOCK OPTIONS

HINWEIS!

1. LINKS/LINKE SEITE UND RECHTS/RECHTE SEITE IST DIE SICHTWEISE VON DRAUSSEN HINTER DEM ROLLTOR STEHEND.
2. NEOPREN SEITENDICHTUNG POS. 63 AUF 200mm ZU KUERZEN.
3. DIE ABMESSUNGEN DER ■ MARKIERTEN POSITIONEN VARIIEREN ENTSPRECHEND DER LICHTEN HOEHE

CONFIDENTIAL
PROPERTY OF J R INDUSTRIES LTD

⊠	MODIFICATION	SIGN DATE
1	FIRST ISSUE	3.4.98
2	RIVETS ADDED TO ITEM 29 LATCH PLATE CHANGED TO 75-10 TYPE (463)	MM 2.5.98
3	BRUSH & NEOPRENE SEAL ADDED (517)	AS 8.8.98
4	PART Nos AMENDED NOTE 3 ADDED (547)	KH 11.11.98
5	DIM 13 WAS 9	KH 2.12.98
6	ITEM 9 CHANGED	AS 19.1.99
7	ITEM 28 DELETED, TOP CLOSURE NUTS NOW ITEM 47 (580)	AS 3.6.99
8	ITEM 29 PART No AMENDED (569)	AS 23.10.99
9	ITEM 8 PART No AMENDED (610)	AS 11.1.00
10	ITEMS 23 & 24 PART No AMENDED (642)	AS 14.7.00
11	ITEMS 43 & 44 AMENDED	AS 9.8.00
12	ITEMS 1, 23, 24 & 30 PART Nos AMENDED	KH 1.10.02
13	29 PART No AMENDED	KH 31.10.02
14	ITEM No 23 & 24 PART No AMENDED	KH 28.10.03
15	ITEM No 28 & 30 BALLOONS ADDED TO DRAWING	KH 5.7.05
16	PART Nos AMENDED TITLE BLOCK CHANGED	KH 28.1.08
17	70 LOCK OPTION ADDED	KH 29/9/08
18	ITEM 27 PART NUMBER AMENDED	KH 14/5/09
19	UK OFFSIDE NEAR SIDE ADDED TO DESCRIPTION	KH 14.2.11

PROJECT
CUST.
BAILER
FINISH
MATERIAL
DRAWN MATHEW MARSHALL

J R Industries
Whiting House, Dr Witz Quay Way
Pontygwindy Industrial Estate Caerphilly CF83 3HH
Tel: (029) 2085 1600 Fax: (029) 2085 1606 E-mail: sales@jrindustries.co.uk Web: www.jrindustries.co.uk

THIS DRAWING AND COPYRIGHT THEREOF ARE THE PROPERTY OF J R INDUSTRIES LTD. AND MUST NOT BE REPRODUCED IN PART OR WHOLE OR PASSED ON TO OTHERS WITHOUT PERMISSION.

SINGLE COMPONENT PART No
LEFT HAND PART No
RIGHT HAND PART No

TITLE
WHITING CONTINENTAL III
EXPLODED VIEW (SHEET 1 OF 2)

3rd ANGLE | DRAWING No. W 584 | SCALE NTS | A0

ALL DIMENSIONS ARE IN mm UNLESS OTHERWISE STATED

IF IN DOUBT ASK!