REVISION HISTORY			
REV	DESCRIPTION	DATE	APPROVED
1	NEW DRAWING	06.04.1995	
2	ITEM 25 PART No CHANGED	13/1/1997	KEVIN HOPKINS
3	ITEM 27 PART No CHANGED	15/5/2009	KEVIN HOPKINS

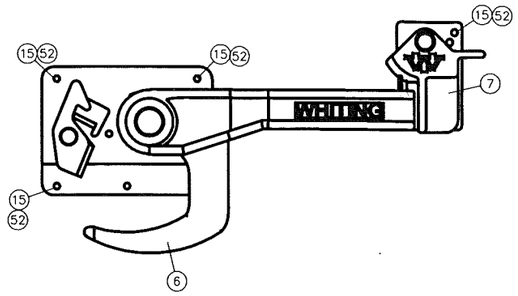

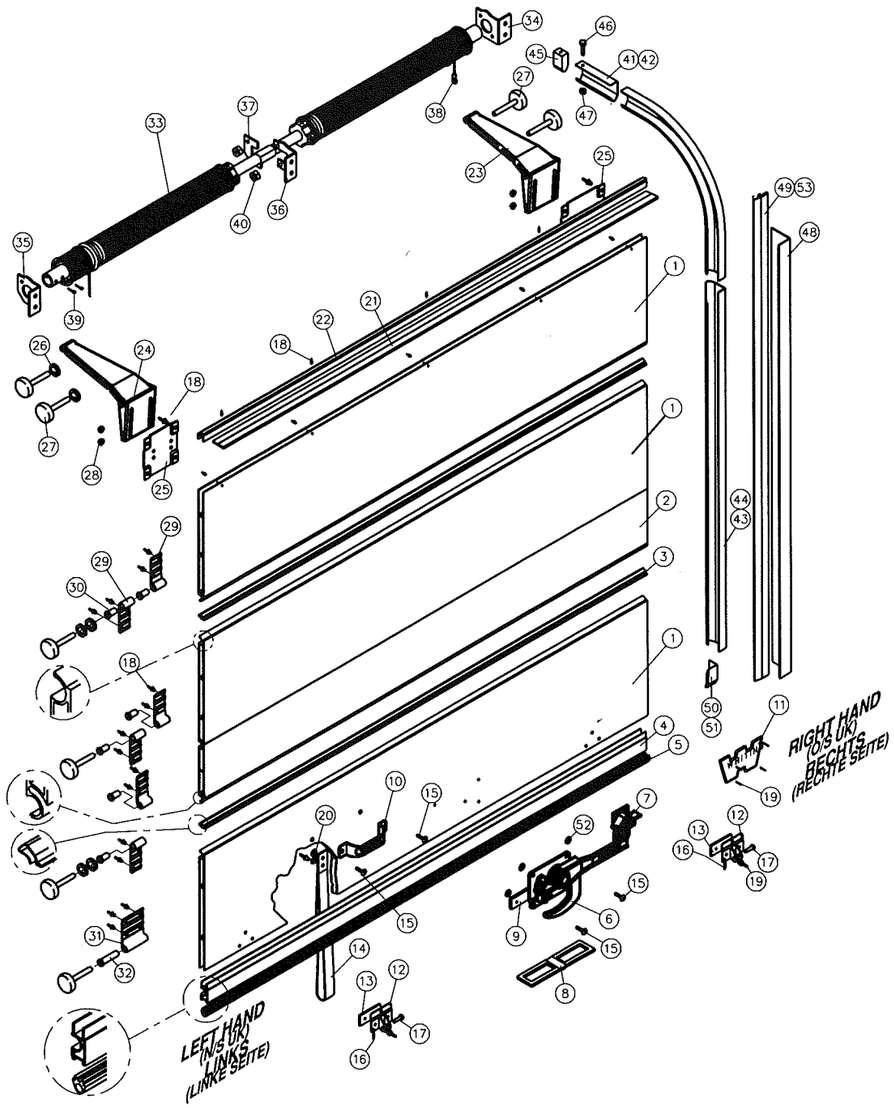

ITEM	DESCRIPTION	PART NUMBER	DWG No.
1	300mm PANEL	3010100160100	W 350
2	150mm PANEL	3010100160200	W 351
3	PANEL INTERSEAL	3010317060000	W 353
4	SEAL & ROLLER CARRIER	3010100160400	W 357
5	BOTTOM 'D' TYPE SEAL	3010433000199	W 395
6	77 TYPE LOCK ASSEMBLY 'E'-COATED	30177-0000000	
7	LOCK HANDLE KEEPER 'E'-COATED	3012766-00001	
8	LATCH PLATE	3012804-00000	W 83
9	LOCK SPACER	30177-0000002	SW 153
10	GRAB HANDLE 'E'-COATED	3011715-00000	
11	NAME PLATE	301NP00000010	
12	CABLE ANCHOR	3015803-00000	
13	CABLE ANCHOR SPACER	3015803-00002	SW 153
14	PULL DOWN STRAP STANDARD LENGTH 381mm(15")	30123-0000015	
15	SEMI TUBULAR RIVET 1/4" x 1 13/32"	30110-1002-10	
16	COTTER PIN 1/8" x 3/4" LG.	30110-1009-07	
17	CLEVIS PIN 5/16" x 1" LG.	30110-1004-01	
18	RIVET-6.4 x 13 DOMED HEAD	301D850-00000	
19	RIVET DMD. HD. 4.8mm x 12.7mm LG.	30110-1002-16	
20	1/4" x 9/16" WASHER	30194-0000000	
21	TOP SEAL BRUSH (5/32" x 25)	3017107-00000	
22	TOP SEAL CARRIER	301-7488-0000	
23	TOP CLOSURE ARM R/H (E-COATED)	3011336-2-000	
24	TOP CLOSURE ARM L/H (E-COATED)	3011336-1-000	
25	TOP CLOSURE ARM MTG BRKT (E-COATED)	3011920-00000	
26	SPACER WASHER-ROLLER SHAFT	30106-0000000	
27	TRACK ROLLER(STEEL)	3012996-10000	SW 27
28	TOP CLOSURE ARM NUT M6	301920000SSM6	
29	ROLLER HOLDER HINGE 34mm	3019110001016	W 376
30	NOISE REDUCTION BUSH 27mm LG	3010305002055	W 368
31	ROLLER HOLDER HINGE 70mm	3019110002016	W 376
32	NOISE REDUCTION BUSH 53mm LG	3010305002056	W 368
33	BALANCER ASSEMBLY		
34	BALANCER MOUNTING BRACKET O/S	3012523-00000	
35	BALANCER MOUNTING BRACKET N/S	3012524-00000	
36	BALANCER MOUNTING BRACKET CENTRE	3012525-00000	
37	BALANCER MOUNTING BRACKET TORQUE	3012527-00000	
38	CABLE-3175mm(125")	3011-1A000000	
39	5 x 38 SPLIT PIN	30110-1009-08	W 262
40	WHIZ NUT 5/16"	30110-1063-01	
41	HORIZONTAL TRACK 254mm(10") RADIUS-O/S	30111-04A0000	W 220
42	HORIZONTAL TRACK 254mm(10") RADIUS-N/S	30111-05A0000	
43	VERTICAL TRACK-OFFSIDE	3011031-01905	W 398
44	VERTICAL TRACK-NEARSIDE	3011031-01905	
45	TRACK STOP BUMPER	30183-0000000	
46	CAP SCREW 1/4" x 2-1/2"	30110-1010-03	
47	1/4" KEP NUT	30110-1022-01	
48	57 x 63 MOUNTING ANGLE/SIDE SEAL CARRIER	30161-0000000	
49	SIDE SEAL	3010100000006	W 237
50	BOTTOM SEAL BLOCK R/H	3010202030113	W 397
51	BOTTOM SEAL BLOCK L/H	3010202030114	
52	PENNY WASHER	30193-0000020	
53	BRUSH SEAL	301-5833-0000	

* DIESE MASSE SIND KONTROLLMASSE DIE BEIM EINBAU ZU BEACHTEN SIND.

NOTES:

1. LEFT & RIGHT HAND ARE DETERMINED BY STANDING OUTSIDE LOOKING AT THE SHUTTER.

HINWEIS:

1. LINKS/LINKE SEITE UND RECHTS/RECHTE SEITE IST DIE SICHTWEISE VON DRAUSSEN HINTER DEM ROLLTOR STEHEND

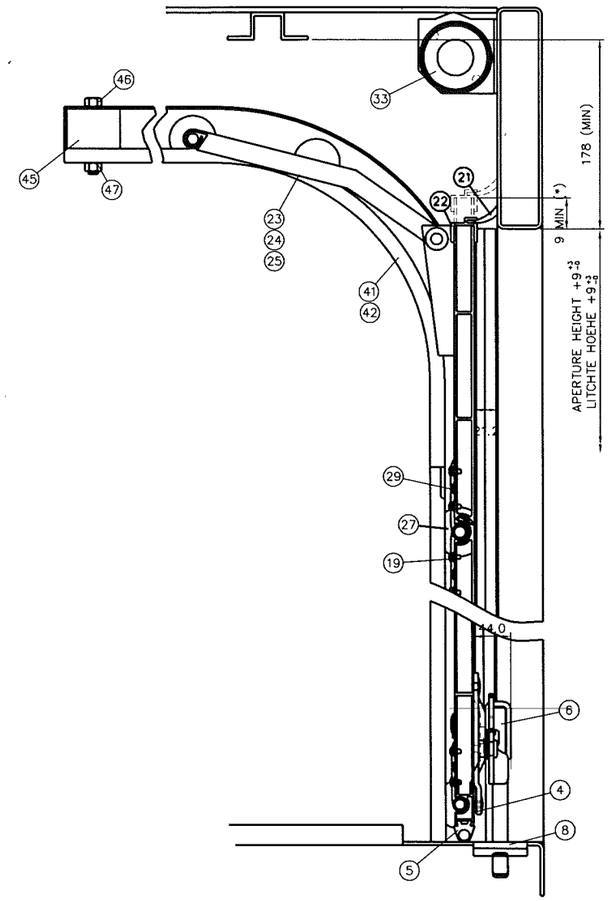

ZUBEHOER FUER DB MIT EINER NUTZLAST VON MAX. 16000KG

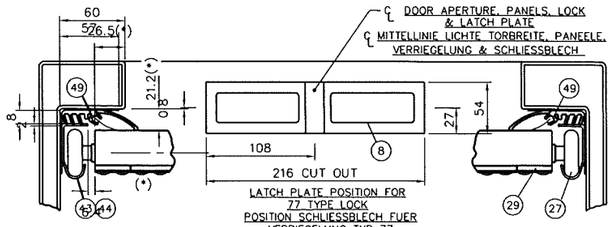

LATCH PLATE POSITION FOR 77 TYPE LOCK
POSITION SCHLIESSBLECH FUER VERRIEGELUNG TYP 77

UNLESS OTHERWISE SPECIFIED ALL DIMENSIONS IN MM BEFORE SURFACE TREATMENT REMOVE ALL BURS AND SHARP EDGES					
X ±0.1	XX ±0.01	XXX ±0.005	ANGLE ±0.5°	MATERIAL:	
3rd ANGLE PROJECTION				FINISH/COLOUR:	
IF IN DOUBT ASK! DO NOT SCALE				TOTAL MASS:	

DRAWN:	PAUL MARTIN
PART No:	
CUSTOMER:	
BODYBUILDER:	
PROJECT:	CONTINENTAL III
SCALE:	NTS

J Industries Ltd
Whing House, 1 Sir Alfred Owen Way, Pontypandy Industrial Estate, Caerphilly, CF83 2NH.
Tel: (029) 2085 3535 Fax: (029) 2085 3533
E-mail: technical@jindustries.co.uk
Web: www.jindustries.co.uk

THE DRAWING HEREIN IS THE PROPERTY OF J INDUSTRIES LTD AND MUST NOT BE REPRODUCED OR MADE AVAILABLE TO ANY OTHER PARTY WITHOUT OUR CONSENT.

TITLE: WHITING CONTINENTAL II

DRAWING No: W 375

Sheet No: 1 of 1

ORIGINAL PAPER SIZE: A0

Format: AUTOCAD